# FOS Retro L

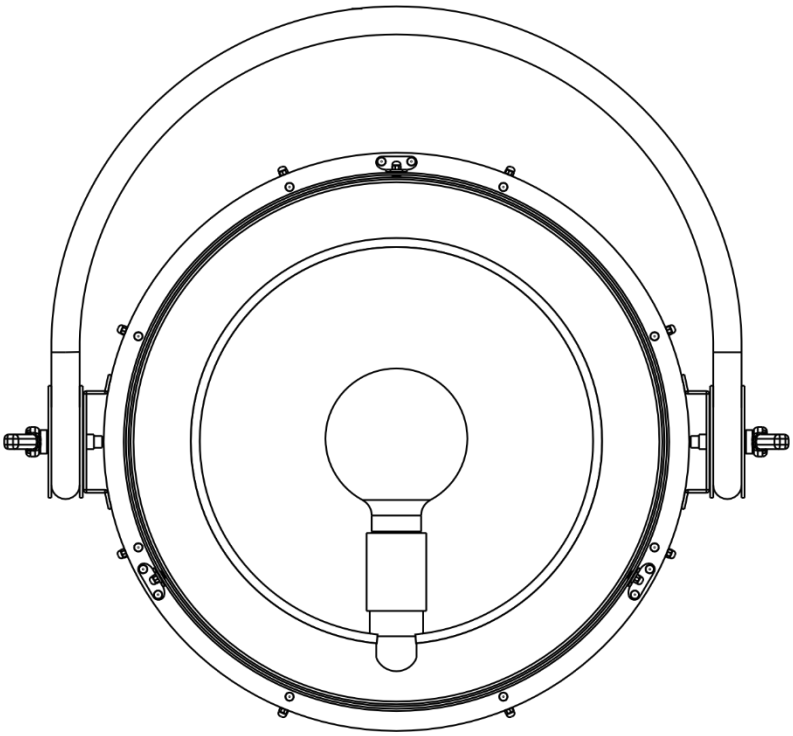

# USER MANUAL

Note: This manual contains important information on how to install and use the product safely. Please read it carefully and install and operate it as required. Also, please keep this manual in a safe place for future reference.

# Safety and operating instructions

This fixture was designed for indoor use only.

This fixture is for professional use only. It is not for household use.

Please consider that damages caused by manual modifications to the fixture are not subject to warranty.

**Allow the fixture to cool before changing the bulb**
**Always disconnect the fixture from mains prior to install (change) the bulb.**

**Min. distance from flammable materials to all exterior surfaces of the luminaire is 0.2 m**

Make sure that the available voltage is not higher than stated on the fixture.

Protect the power supply cable from sharp edges, mechanical strain and hot surfaces. Check the fixture and the power supply cable from time to time.

Always disconnect from the mains, when the fixture is not in use or before cleaning it.

**This fixture falls under protection class I and therefore must be**

The electric connection, repairs and servicing must be carried out by a qualified employee.

For replacement use bulb of the same type and rating only.

**Avoid looking directly into the light source from a small distance.**

When choosing the installation spot, please make sure that the fixture is not exposed to extreme heat, moisture or dust !

**The device never must be covered with cloth or other materials during its operation.**

It is essential that the product does not come into contact with water or other liquids.

## Fixture exterior view

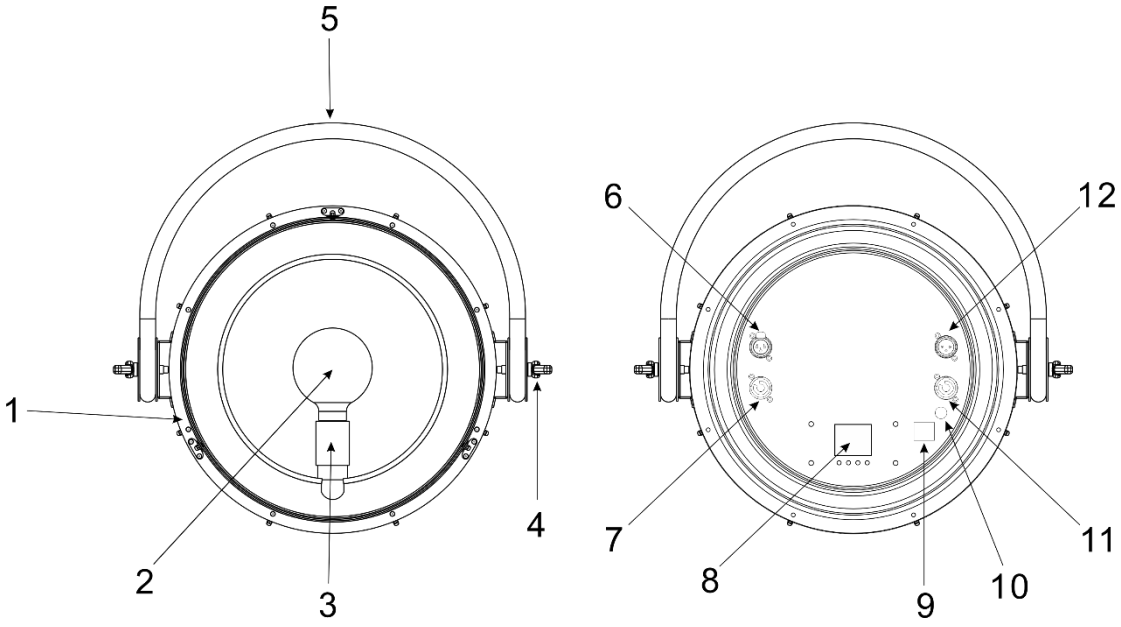


| | | |
|---|---|---|
| **1 - Housing** | **5 - Mounting yoke** | **9 - Power switch** |
| **2 - Bulb** | **6 - DMX In** | **10 - Fuse** |
| **3 - Socket** | **7 - Power In** | **11 - Power Out** |
| **4 - Tilt lock** | **8 – Display** | **12 - DMX Out** |

## Installing the fixture

The fixture has to be rigged to the truss or fastened to the floor stand via the mounting yoke only. The hole of diameter of 12.2 mm in the yoke serves for screwing a clamp or spigot to the yoke (the spigot has to be inserted into floor stand and secured).

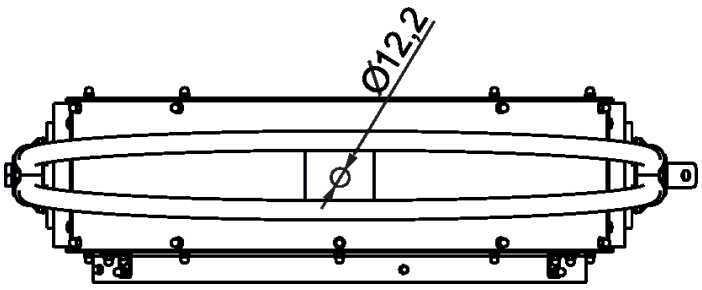

Always check the fixture is installed safely without a possibility to tilt it over.

For overhead installation this fixture has to be always secured to the truss by means of a safety wire (that can hold at least 10 times the weight of the fixture) which is fastened to the truss and around mounting yoke of this fixture.

If you need to install a male plug on the power cable to allow connection to power outlet, install a grounding-type (earthed) plug, following the plug manufacturer's instructions.

**The fixture falls under class 1 and must be earthed (grounded)!**

## Replacing the bulb

**Unplug from mains before installing the LED bulb!**
**Allow the LED bulb to cool prior to manipulate with it**

1. Unscrew the LED bulb (2) from the socket (3).
2. Screw the new LED bulb (2) to socket (3).

## Technical specifications

| | |
|---|---|
| Mains input: | 230V 50/60Hz |
| Rated power: | 60W |
| Bulb source: | High performance Tungsten bulb |
| Bulb source type: | Vertical spiral Filament bulb G95 230V E27 40W 1700K Ra≥97 dimmable Golden finish |
| Bulb colour temperature: | 1700 K |
| Max. power consumption: | 40W |
| Base: | E27 |
| Aura light source: | 71 x RGB 3in1 leds |
| Aura light source type: | DC12V Flexiable led strip white silicone tube 850mm |
| Max. power consumption: | 9W |
| Control mode: | DMX512, Manual |

| | |
|---|---|
| DMX channel: | 6 channels |
| Min. distance from flammable materials: | 0.2 m |
| Housing materials: | Metal and aluminum |
| Weight: | 6.0 kg |
| Mounting Points: | Mounting horizontally or vertically via mounting yoke (360° tilt range) |
| Rigging: | M12 mounting for clamp or spigot. |
| Operation position: | Any |
| Ingress protection rating: | IP20 |
| Packing size: | 59x54x29cm |
| G.W.: | 8.0 kg |

## Dimensions (mm)

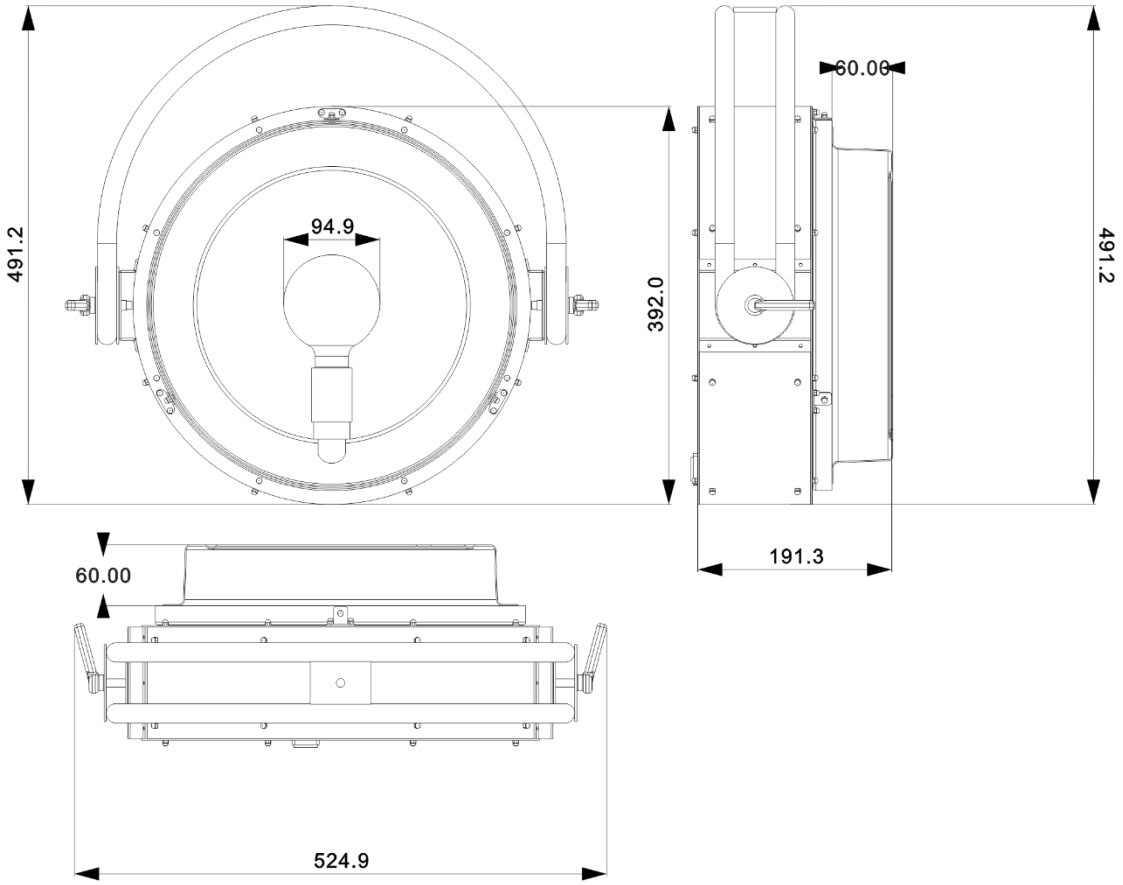

# Control Menu

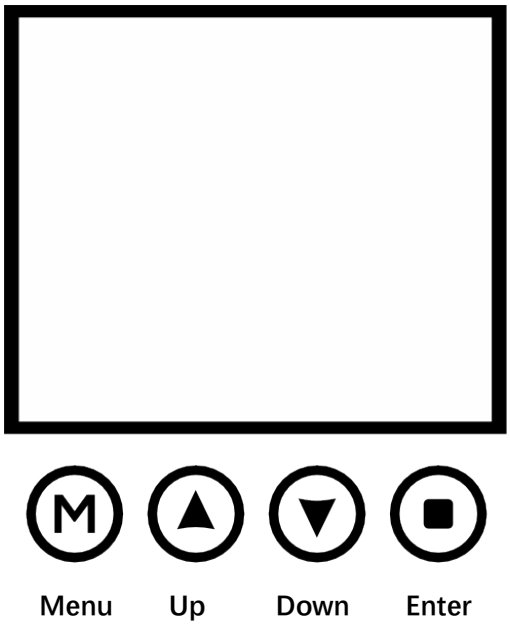


## Menu Control Instructions

| Function | Value |
|---|---|
| DMX Addr | 001-512 |
| Bulb Dim | 000-255 |
| Aura Dim | 000-255 |
| AuraColor | 000-103 |
| AuraEffect | 00-40 |
| AuraSpeed | 00-25 |

# DMX Channel

| Channel | DMX value | Function |
|---|---|---|
| CH1 | 0-255 | Main Dimmer |
| CH2 | 0-255 | Bulb Dimmer |
| CH3 | 0-255 | Aura Dimmer |
| CH4 | 0-255 | Aura Colors |
| CH5 | 0-255 | Aura Effects |
| CH6 | 0-255 | Aura Effect Speed |